322. Pattern 4 – Level IV Ranch Horsemanship

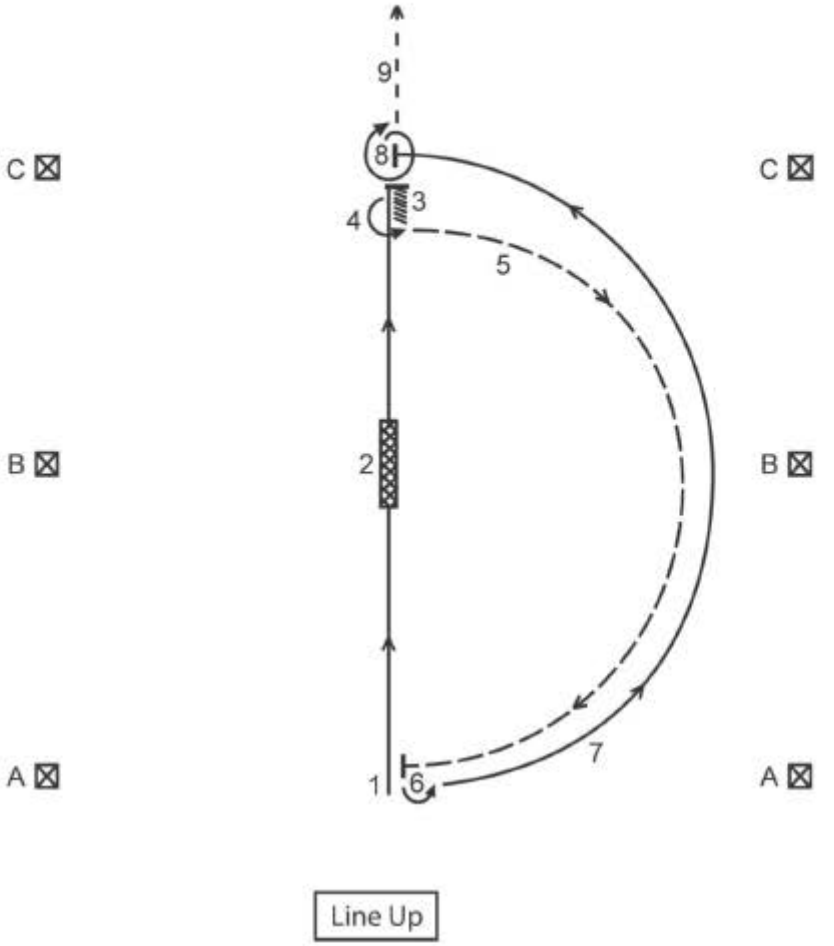

Jog: _ _ _ _ _ _ _ _ Lope: _____
Extended Jog: _ _ _ _ Back: ////////////
Lead Chaning Area: ⊠⊠⊠⊠⊠⊠⊠⊠

1. Starting on the right lead, lope from A to B down the center of the arena.
2. Flying lead change at B. Continue loping straight.
3. Halt at C. Back one horse length.
4. 270° hindquarter turn to the left.
5. Extended jog half a circle to A.
6. Halt at A. 180° hindquarter turn to the left.
7. Build a loop. Lope a half circle to the left while swinging the loop.
8. Halt at C and recoil rope. 450° hindquarter turn to the right.
9. Jog into new line up or follow the instructions of the ring steward.